Re-drawn by Grant Searle 2009
(this will not appear when printed)

ZX80 CIRCUIT DIAGRAM

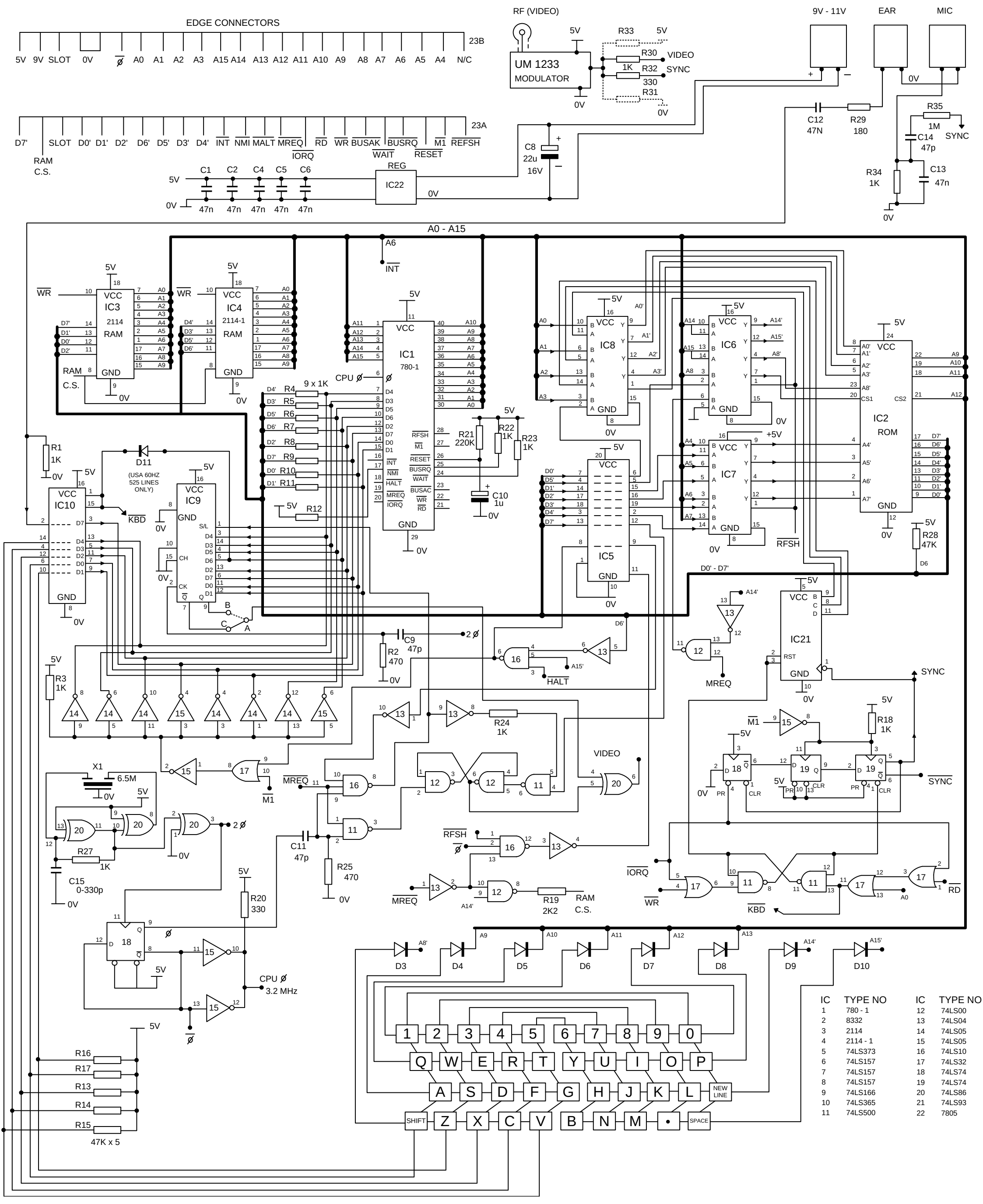

IC	TYPE NO	IC	TYPE NO
1	780 - 1	12	74LS00
2	8332	13	74LS04
3	2114	14	74LS05
4	2114 - 1	15	74LS05
5	74LS373	16	74LS10
6	74LS157	17	74LS32
7	74LS157	18	74LS74
8	74LS157	19	74LS74
9	74LS166	20	74LS86
10	74LS365	21	74LS93
11	74LS500	22	7805